HDM32GS12_-B

Dimensional Drawing

122 X 32 Dots Graphic

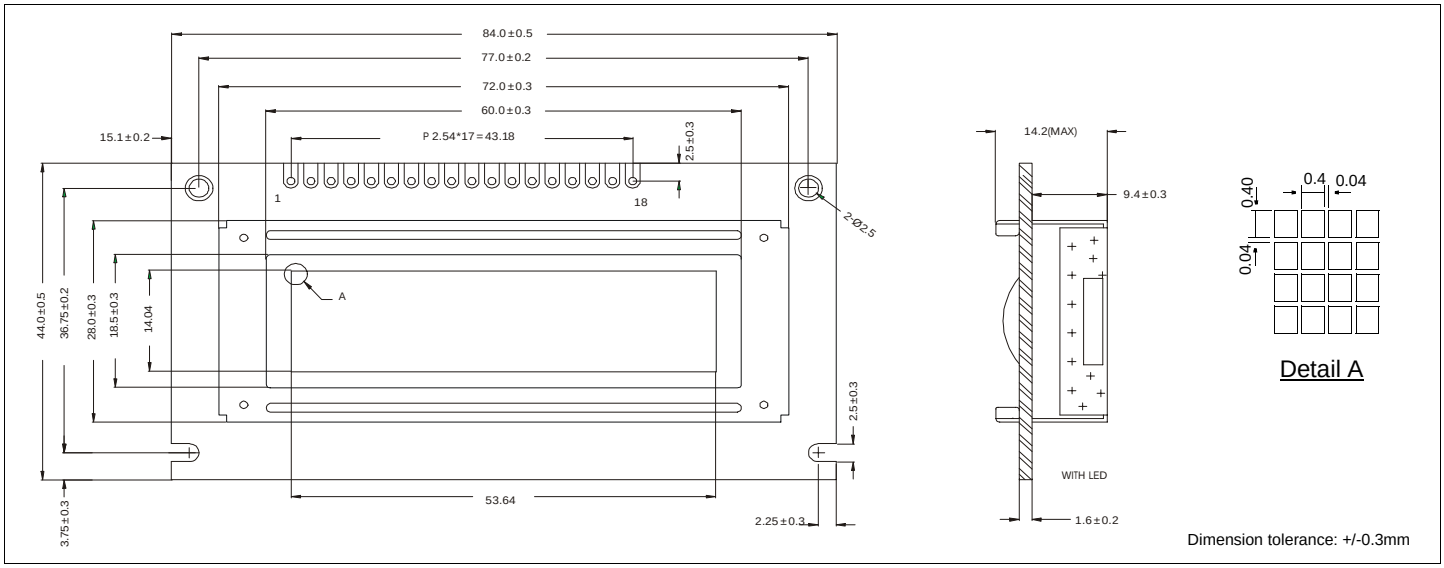

Features

Backlight.....LED or None
Options.....Yellow STN / Gray STN , FSTN
Normal / Extended Temperature
Top / Bottom Viewing
Built-in Controller.....SED1520D0A

Physical Data

Module Size.....84.0W x 44.0H x 14.2T mm
Viewing Area Size.....60.0W x 18.5H mm
Dot Pitch.....0.44W x 0.44H mm
Dot Size.....0.40W x 0.40H mm
Weight.....28g

Electrical Characteristics (VDD=5.0±0.25V 25°C)

PARAMETER	SYM	CONDITION	MIN	TYP	MAX	UNIT
INPUT HIGH VOLTAGE	V_{IH}	-	$.8V_{DD}$	-	V_{DD}	V
INPUT LOW VOLTAGE	V_{IL}	-	V_{SS}	-	$.2V_{DD}$	V
POWER SUPPLY CURRENT	I_{DD}	V_{DD}=5.0V	-	0.5	1.0	mA
LCD POWER SUPPLY	V_{DD}-V_L	T_A=25°C	-	4.8	-	V
LCD POWER CURRENT	I_L	T_A=25°C	-	1.0	1.5	mA
LED FORWARD VOLTAGE	V_F	I_F=90mA	3.95	4.1	4.25	V
LED FORWARD CURRENT	I_F	V_F=4.2V	-	90	-	mA
DRIVE METHOD	1/32 DUTY					

Power Supply

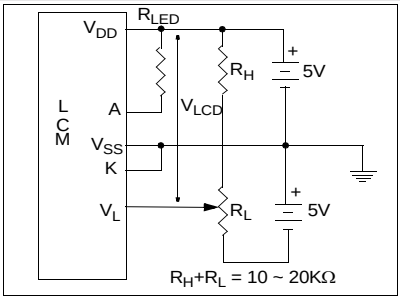

Absolute Maximum Ratings

PARAMETER	SYMBOL	MIN	MAX	UNIT
SUPPLY VOLTAGE	V_{DD}-V_{SS}	-0.3	7.0	V
LCD SUPPLY VOLTAGE	V_{DD}-V_L	V_{DD}-13.5	V_{DD}+0.3	V
INPUT VOLTAGE	V_{IN}	-	V_{DD}+0.3	V
OPERATING TEMPERATURE	T_{OP}	0	50	°C
STORAGE TEMPERATURE	T_{STG}	-20	70	°C

Pin Connections

PIN NO.	SYMBOL	FUNCTION	
1	V_{SS}	0V	Ground
2	V_{DD}	5V	Power supply for logic
3	V_L	-	Operating voltage for LC
4	A_0	H/L	L=Instruction, H=Data
5	E1	L	Chip select
6	E2	L	Chip select
7	WR (R/W)	-	WR (80 series), R/W (68 series)
8	DB0	H/L	Data bus
9	DB1	H/L	
10	DB2	H/L	
11	DB3	H/L	
12	DB4	H/L	
13	DB5	H/L	
14	DB6	H/L	
15	DB7	H/L	
16	RES	H/L	L=80 series, H=68 series
17	A	-	Power supply for LED backlight
18	K	-	