HDM64GS12L-5

Dimensional Drawing

128 X 64 Dots Graphic with LED Backlight

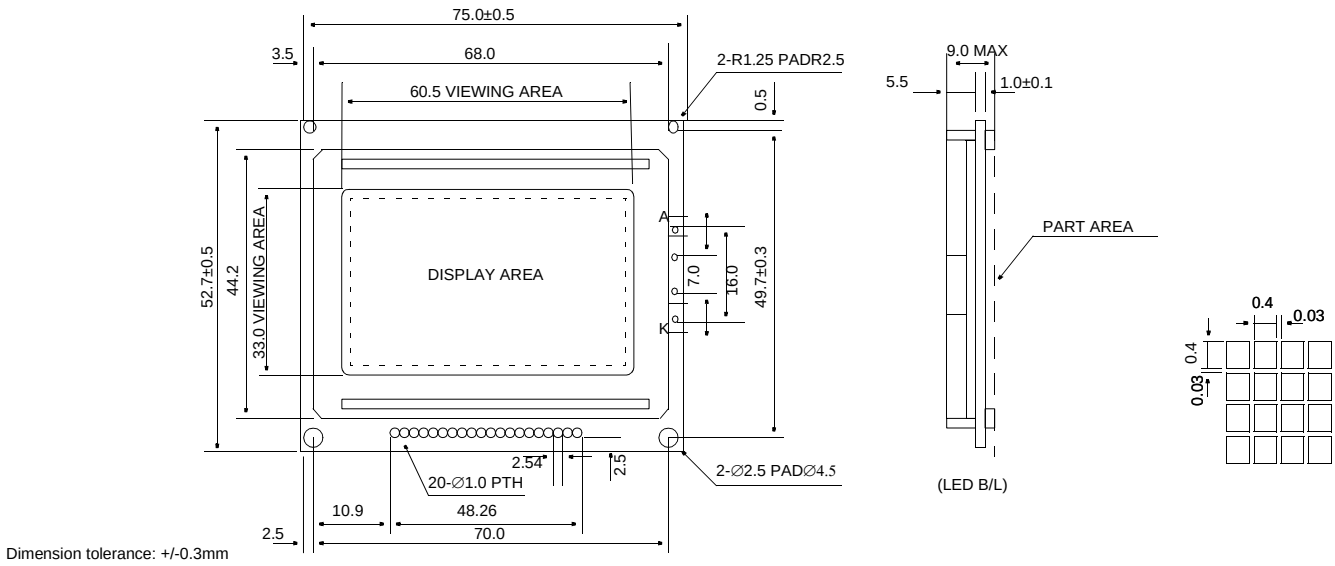

Features

Backlight..... LED
Options.....Gray or Yellow STN, Black & White FSTN
Normal/Extended Temperature
Bottom / Top Viewing
Built-in Controller.....Samsung KS0108
Built-in DC-DC converter

Physical Data

Module Size .....75.0W x 52.7H x 9.0T mm
Viewing Area Size.....60.5W x 33.0H mm
Dot Pitch.....0.43W x 0.43H mm
Dot Size.....0.40W x 0.40H mm
Weight.....35.6g

Power Supply

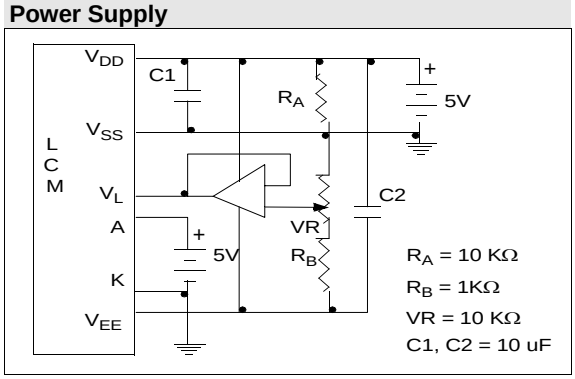

Absolute Maximum Ratings

PARAMETER	SYMBOL	MIN	MAX	UNIT
Supply Voltage	V_{DD}-V_{SS}	0	7.0	V
Input Voltage	V_{IN}	-	7.0	V
Operating Temperature	T_{OP}	0	50	°C
Storage Temperature	T_{STG}	-20	70	°C

Electrical Characteristics (VDD=5.0±0.25V 25°C)

PARAMETER	SYM	CONDITION	MIN	TYP	MAX	UNIT
Input High Voltage	V_{IH}	-	.7 V_{DD}	-	V_{DD}	V
Input Low Voltage	V_{IL}	-	-	-	.3 V_{DD}	V
Power Supply Voltage	V_{DD}-V_L	V_{DD}=5.0V	8.0	9.0	10.0	V
Power Supply Current	I_{DD}	V_{DD}=5.0V	-	3.8		mA
LED Forward Voltage	V_F		-	4.2	4.6	V
LED Forward Current	I_F	V_F=4.2V	-	100	200	mA
LED Power Dissipation	P_D		-	420		mW
BRIGHTESS	L	I_F=100mA	-	60		cd/m^2
DRIVE METHOD	1/64 Duty					

Pin Connections

PIN NO.	SYMBOL	FUNCTION	
1	V_{SS}	0V	Ground
2	V_{DD}	5V	Power supply for logic
3	V_L	-	Operating voltage for LC
4	D/I	H/L	1=Data, 0=Instruction
5	R/W	H/L	1=Data read, 0=Data write
6	E	H/H->L	Enable
7	DB0	H/L	Data bus
8	DB1	H/L	
9	DB2	H/L	
10	DB3	H/L	
11	DB4	H/L	
12	DB5	H/L	
13	DB6	H/L	
14	DB7	H/L	
15	CS1	H	Left Half Chip Select
16	CS2	H	Right Half Chip Select
17	RStb	L	Reset
18	V_{EE}	Output	#
19	A	-	LED Anode
20	K	-	LED Cathode

Has built-in inverter for negative power supply