HANTRONIX

PRODUCT SPECIFICATION

HDA1010W-S-WV

10.1”, TFT WXGA (1280X800) COLOR LCD DISPLAY MODULE

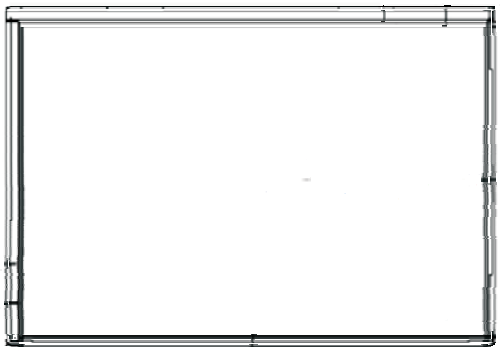

HANTRONIX, INC. 10080 BUBB RD. CUPERTINO, CA 95014	Q.A.: Z.W.	REV.: 3.0	HDA1010W-S-WV	SHEET 1 OF 17 DATE: 10/30/15

1.General Specifications

No	Item	Specification	Remark
1	LCD size	10.1 Inch(Diagonal)	
2	Driver element	a-Si TFT active matrix	
3	Resolution	1280 x 3(RGB) x 800	
4	Display mode	Normally Black ,Transmissive	
5	Dot pith	0.0565(W) x 0.1695(H) mm	
6	Active area	216.96(W) x 135.60(H) mm	
7	Module size	229.46(W) x 149.1(H) x 2.50(D) mm	Note1
8	Surface treatment	HC	
9	Color arrangement	RGB-sripe	
10	Interface	Digital	
11	Backlight power consumption	1.86 W	
12	Panel power consumption	1W	Note2
13	Weight	TBD(Max)	
14	Panel type	IPS Panel	

Note 1: Refer to Mechanical Drawing.

Note 2: Including T-con Board power consumption

2. Pin Assignment

A 40pin connector is used for the module electronics interface. The recommended model is F62240-H1210A manufactured by Vigorconn.

Pin No.	Symbol	I/O	Function	Remark
1	VCOM	P	Common Voltage	
2	VDD	P	Power Supply	
3	VDD	P	Power Supply	
4	NC	---	No connection	
5	NC	---	No connection	
6	NC	---	No connection	
7	GND	P	Ground	
8	Rxin0-	I	-LVDS Differential Data Input	R0-R5, G0
9	Rxin0+	I	+LVDS Differential Data Input	
10	GND	P	Ground	
11	Rxin1-	I	-LVDS Differential Data Input	G1~G5, B0,B1
12	Rxin1+	I	+LVDS Differential Data Input	
13	GND	P	Ground	
14	Rxin2-	I	-LVDS Differential Data Input	B2-B5,HS,VS, DE
15	Rxin2+	I	+LVDS Differential Data Input	
16	GND	P	Ground	
17	RxCLK-	I	-LVDS Differential Clock Input	LVDS CLK
18	RxCLK+	I	+LVDS Differential Clock Input	
19	GND	P	Ground	
20	Rxin3-	I	-LVDS Differential Data Input	R6, R7, G6, G7, B6, B7
21	Rxin3+	I	+LVDS Differential Data Input	
22	GND	P	Ground	
23	NC	---	No connection	
24	NC	---	No connection	
25	GND	P	Ground	
26	NC	---	No connection	

27	LED_PWM	O	CABC controller signal output for backlight	Note2
28	NC	---	No connection	
29	AVDD	P	Power for Analog Circuit	
30	GND	P	Ground	
31	LED-	P	LED Cathode	
32	LED-	P	LED Cathode	
33	NC	---	No connection	
34	NC	---	No connection	
35	VGL	P	Gate OFF Voltage	
36	NC	---	No connection	
37	CABC_EN	I	CABC Enable Input	Note1
38	VGH	P	Gate ON Voltage	
39	LED+	P	LED Anode	
40	LED+	P	LED Anode	

I: input, O: output, P: Power

Note1: The setting of CABC function are as follows.

Pin	Enable	Disable
CABC_EN	High Voltage	Low Voltage or open

Note2: LED_PWM is used to adjust backlight brightness.

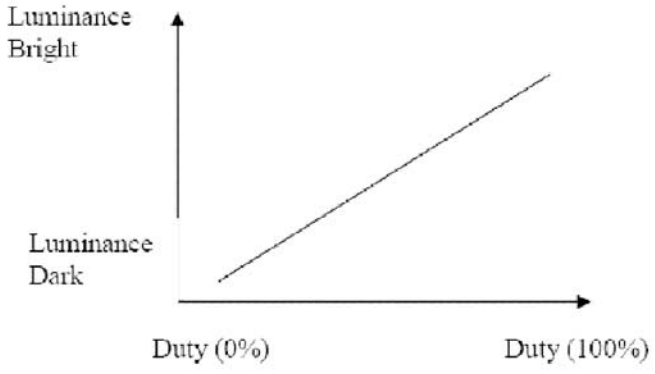

3. Operation Specifications

3.1. Absolute Maximum Ratings

(Note 1)

Item	Symbol	Values		Unit	Remark
		Min.	Max.		
Power voltage	VDD	-0.3	3.9	V	
	AVDD	-0.3	14	V	
	V_{GH}	-0.3	42.0	V	
	V_{GL}	-19	0.3	V	
	V_{GH}-V_{GL}	12	40.0	V	
Operation Temperature	T_{OP}	0	50	℃	
Storage Temperature	T_{ST}	-20	60	℃	
LED Reverse Voltage	V_R			V	Each LED
LED Forward Current	I_F			mA	Each LED

Note 1: The absolute maximum rating values of this product are not allowed to be exceeded at any times. Should a module be used with any of the absolute maximum ratings exceeded, the characteristics of the module may not be recovered, or in an extreme case, the module may be permanently destroyed.

3.1.1. Backlight Driving Conditions

Item	Symbol	Values			Unit	Remark
		Min.	Typ.	Max.		
Voltage for LED backlight	V_L	8.7	9.3	9.9	V	Note 1
Current for LED backlight	I_L	180	200	220	mA	
LED life time	-	15000	20,000	-	Hr	Note 2

Note 1: The LED Supply Voltage is defined by the number of LED at Ta=25℃ and I_L =200mA.

Note 2: The "LED life time" is defined as the module brightness decrease to 50% original brightness at Ta=25℃ and I_L =200mA. The LED lifetime could be decreased if operating I_L is lager than 200mA.

3.1.2. Backlight circuit diagram

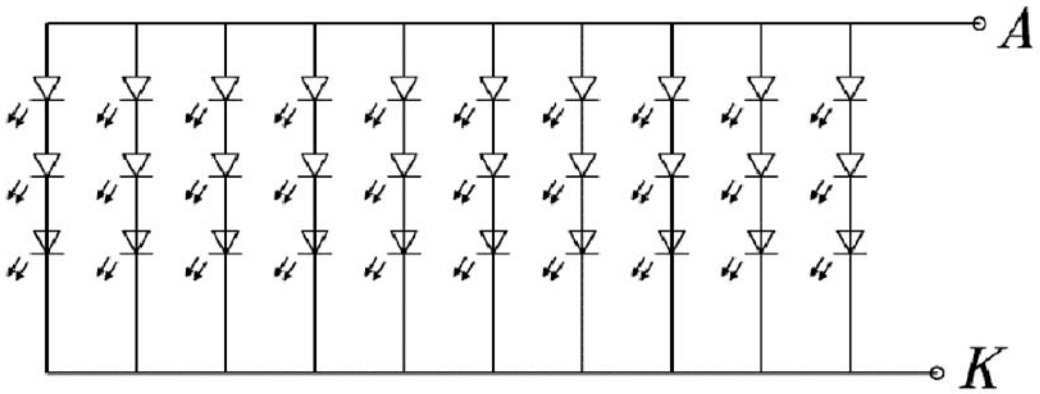

3.2. Typical Operation Conditions

(Note 1)

Item	Symbol	Values			Unit	Remark
		Min.	Typ.	Max.		
Power voltage	VDD	2.3	2.5	2.7	V	Note 2
	AVDD	8.0	8.2	8.4	V	
	V_{GH}	21.7	22	22.3	V	
	V_{GL}	-7.3	-7	-6.7	V	
Input signal voltage	VCOM	2.7	3.0	3.3	V	Note 4
Input logic high voltage	V_{IH}	0.8 VDD	-	3.6	V	Note 3
Input logic low voltage	V_{IL}	0	-	0.2 DV_{DD}	V	

Note 1: Be sure to apply VDD and V_{GL} to the LCD first, and then apply V_{GH}.
Note 2: VDD setting should match the signals output voltage (refer to Note 3) of customer's system board.
Note 4: Typical VCOM is only a reference value, it must be optimized according to each LCM. Be sure to use VR.

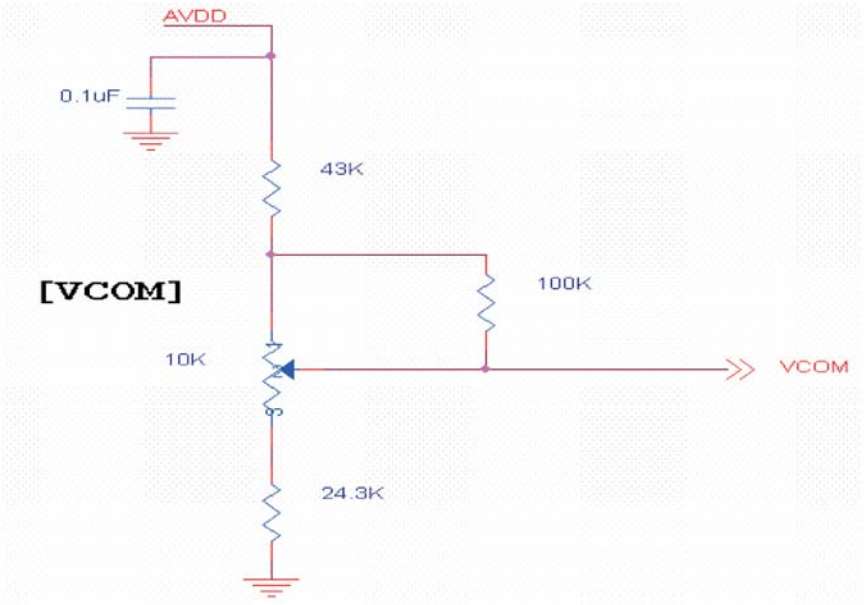

3.3. Power Sequence

a. Power on:

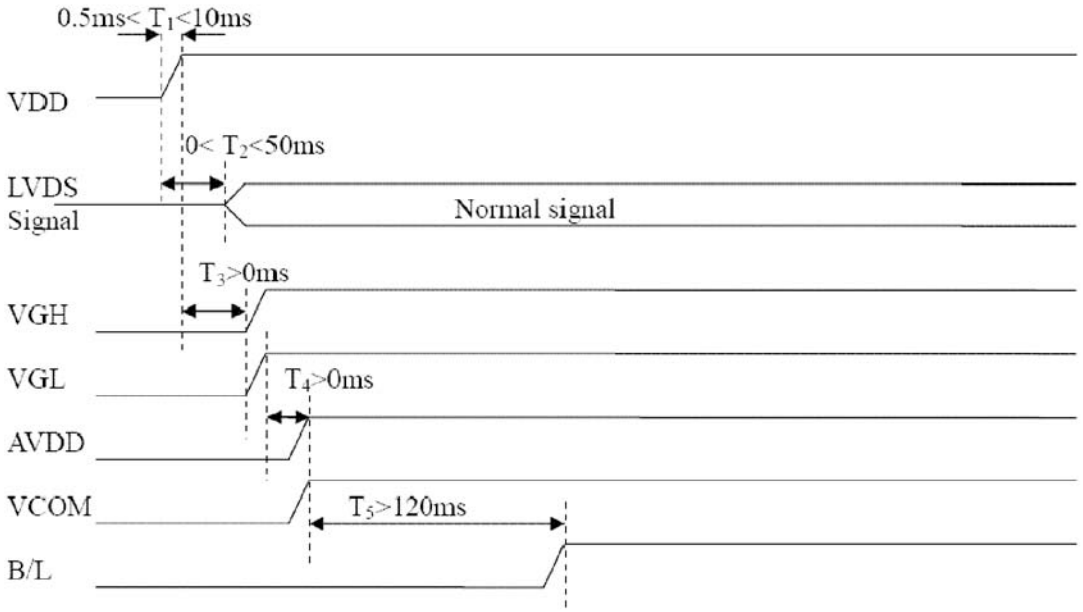

b. Power off:

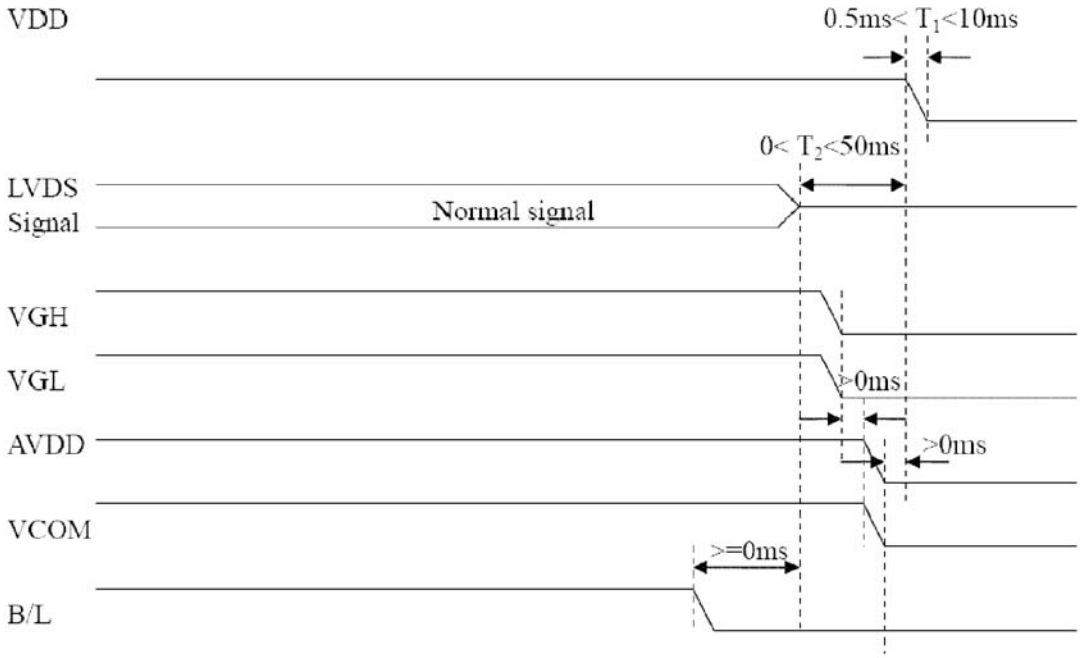

3.4. LVDS Signal Timing Characteristics

3.4.1. AC Electrical Characteristics

Parameter	Symbol	Values			Unit	Remark
		Min.	Typ.	Max.		
LVDS Differential input high Threshold voltage	R_{xVTH}	-	-	+100	mV	R_{XVCM}=1.2V
LVDS Differential input low Threshold voltage	R_{xVTL}	-100	-	-	mV	
LVDS Differential input common mode voltage	R_{xVCM}	0.7	-	1.6	V	
LVDS Differential voltage	$\|V_{ID}\|$	100	-	600	mV	

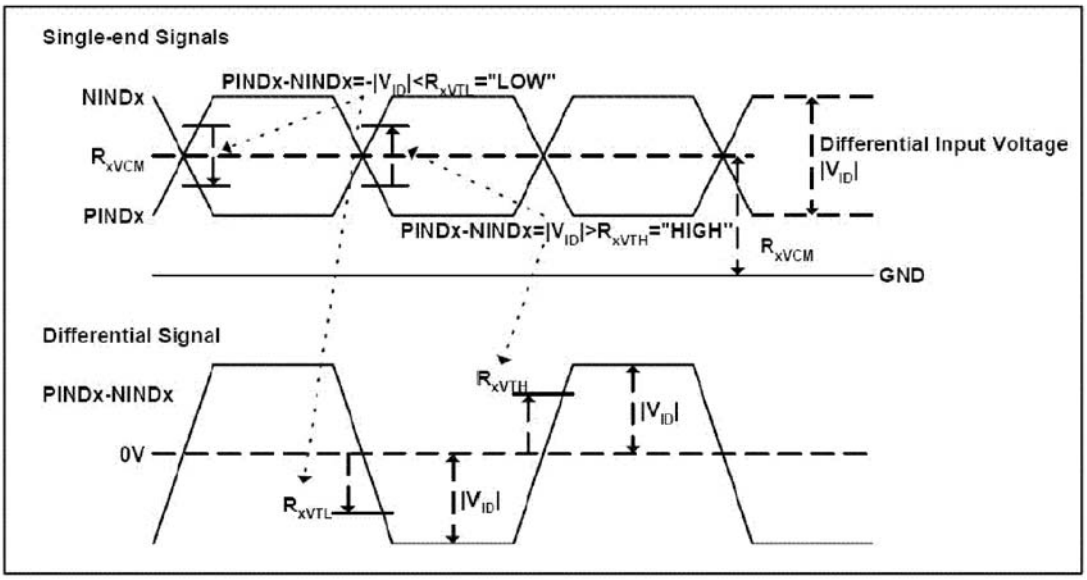

3.4.2. Timing Table

Item	Symbol	Values			Unit	Remark
		Min.	Typ.	Max.		
Clock Frequency	1/Tc	(68.9)	71.1	(73.4)	MHz	Frame rate =60Hz
Horizontal display area	t_{HD}		1280		Tc	
HS period time	t_H	(1410)	1440	(1470)	Tc	
HS Width +Back Porch +Front Porch	t_{HW}+ t_{HBP} +t_{HFP}	(60)	160	(190)	Tc	
Vertical display area	t_{VD}		800		t_H	
VS period time	t_V	(815)	823	(833)	t_H	
VS Width +Back Porch +Front Porch	t_{VW}+ t_{VBP} +t_{VFP}	(15)	23	(33)	t_H	

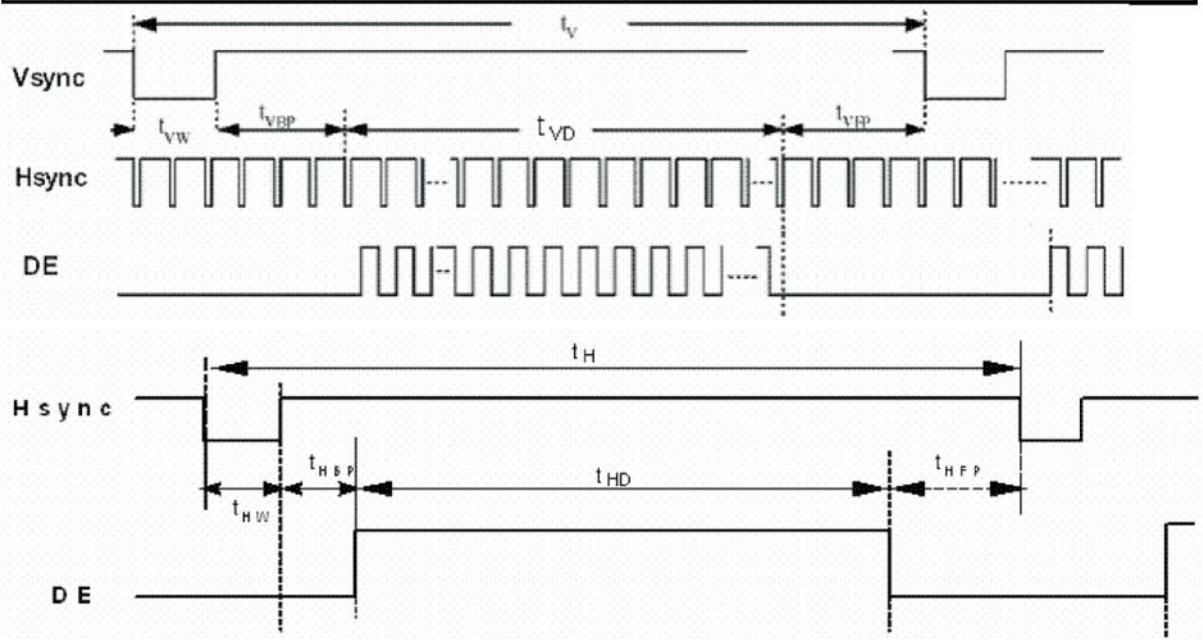

3.4.3. LVDS Data Input Format

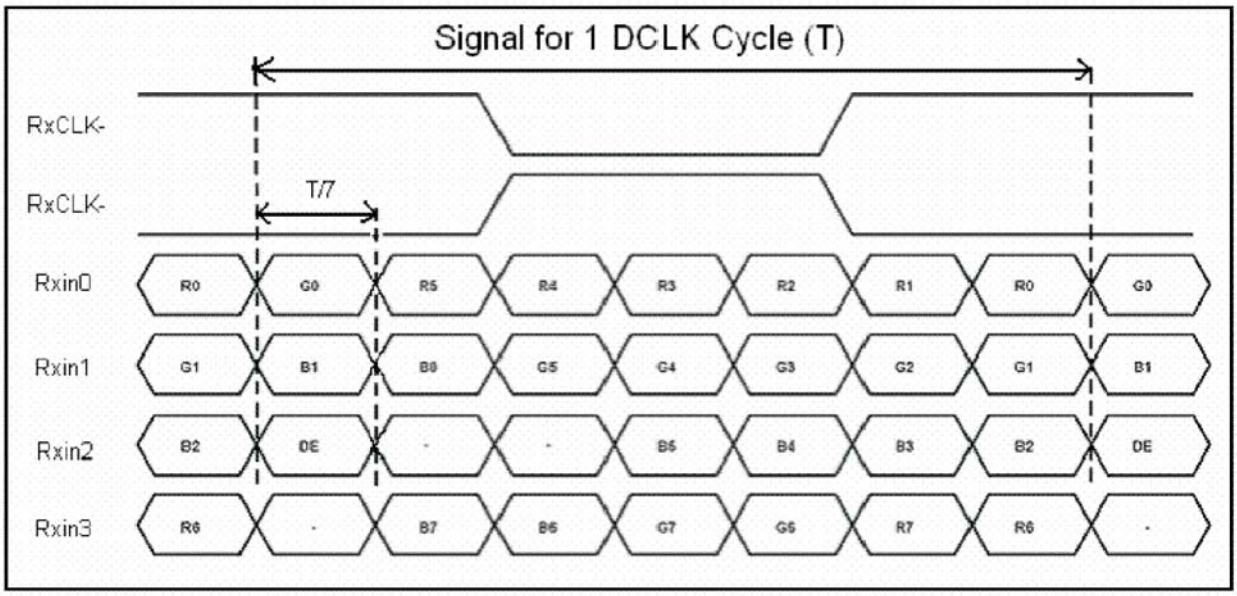

4. Optical Specifications

Item	Symbol	Condition	Values			Unit	Remark
			Min.	Typ.	Max.		
Viewing angle (CR≥ 10)	θ_L	Φ=180°(9 o'clock)	75	85	-	degree	Note 1
	θ_R	Φ=0°(3 o'clock)	75	85	-		
	θ_T	Φ=90°(12 o'clock)	75	85	-		
	θ_B	Φ=270°(6 o'clock)	75	85	-		
Response time	T_{ON}	Normal θ=Φ=0°	-	10	20	msec	Note 3
	T_{OFF}		-	15	30	msec	Note 3
Contrast ratio	CR		600	800	-	-	Note 4
Color chromaticity	W_X		0.26	0.31	0.36	-	Note 2 Note 5 Note 6
	W_Y		0.28	0.33	0.38	-	
Luminance	L		300	350	-	cd/m²	Note 6
Luminance uniformity	Y_U		70	75	-	%	Note 7

Test Conditions:

1. DV_{DD}=3.3V, I_L=200mA (Backlight current), the ambient temperature is 25℃..
2. The test systems refer to Note 2.

Note 1: Definition of viewing angle range

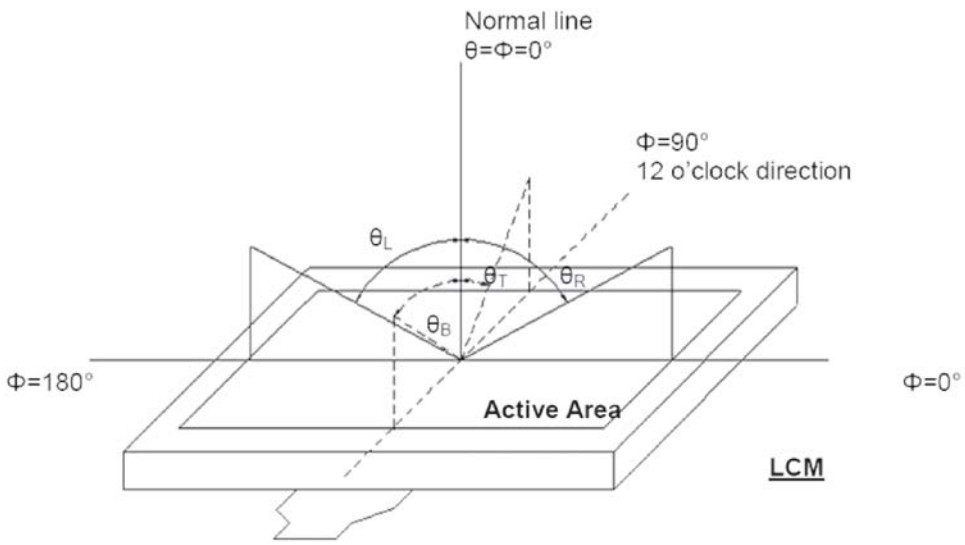

Fig. 4-1 Definition of viewing angle

Note 2: Definition of optical measurement system.

The optical characteristics should be measured in dark room. After 30 minutes operation, the optical properties are measured at the center point of the LCD screen. (Viewing angle is measured by ELDIM-EZ contrast/Height :1.2mm, Response time is measured by Photo detector TOPCON BM-7, other items are measured by BM-5A/ Field of view: 1° /Height: 500mm.)

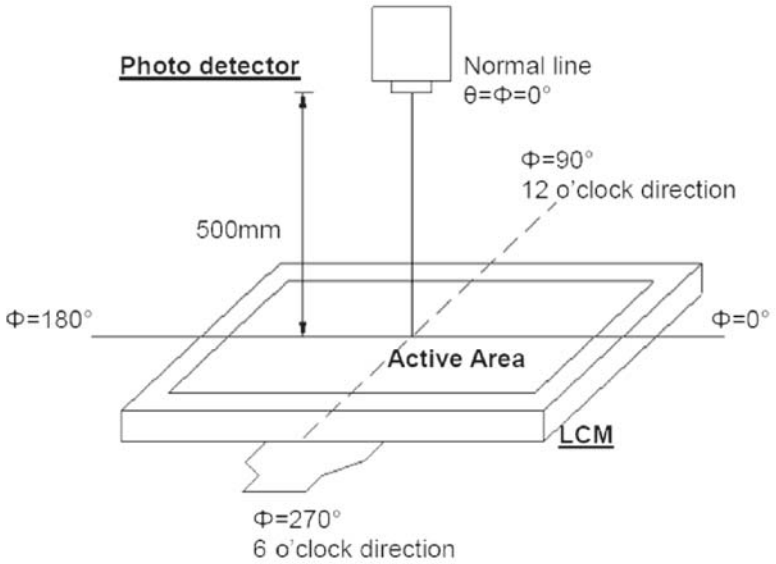

Fig. 4-2 Optical measurement system setup

Note 3: Definition of Response time

The response time is defined as the LCD optical switching time interval between "White" state and "Black" state. Rise time (T_{ON}) is the time between photo detector output intensity changed from 90% to 10%. And fall time (T_{OFF}) is the time between photo detector output intensity changed from 10% to 90%.

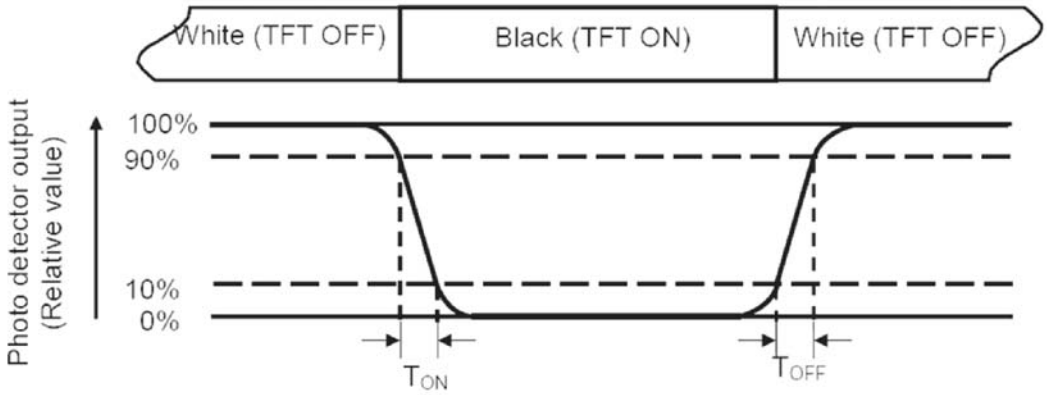

Fig. 4-3 Definition of response time

Note 4: Definition of contrast ratio

$$\text{Contrast ratio (CR)} = \frac{\text{Luminance measured when LCD on the "White" state}}{\text{Luminance measured when LCD on the "Black" state}}$$

Note 5: Definition of color chromaticity (CIE1931)

Color coordinates measured at center point of LCD.

Note 6: All input terminals LCD panel must be ground while measuring the center area of the panel. The LED driving condition is I_L=200mA .

Note 7: Definition of Luminance Uniformity

Measure the luminance of gray level 63 at 9 points

δW_{9p} = {Minimum [L (1)+ L (6)+ L (7)+ L (8)+ L (9)+ L (10)+ L (11) +L (12) +L (13)] / Maximum [L (1)+ L (6)+ L (7)+ L (8)+ L (9)+ L (10)+ L (11) +L (12) +L (13)]}*100%

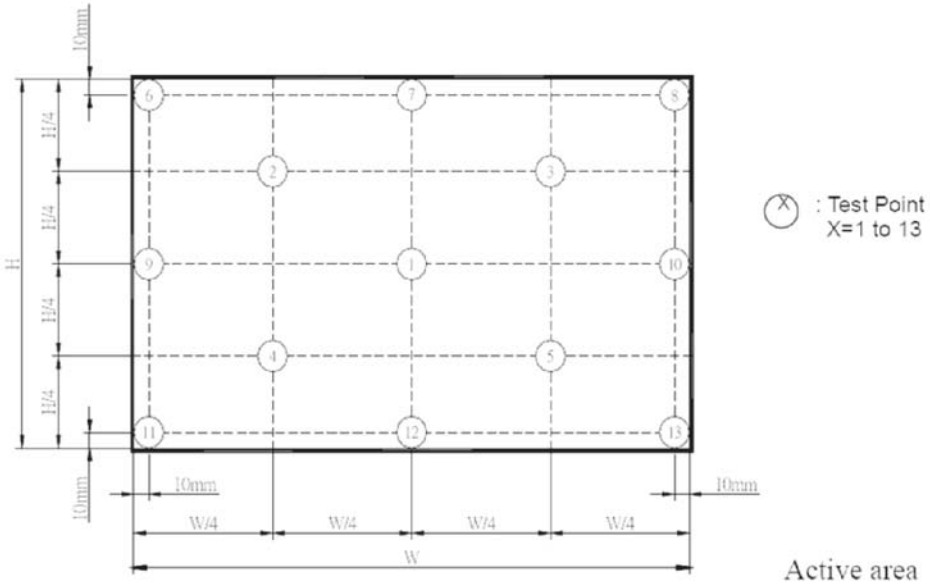

HANTRONIX, INC. 10080 BUBB RD. CUPERTINO, CA 95014	Q.A.: Z.W.	REV.: 3.0	HDA1010W-S-WV	SHEET 15 OF 17 DATE: 10/30/15

5. Reliability Test Items

(Note3)

Item	Test Conditions	Remark
High Temperature Storage	Ta = 60℃ 120hrs	Note 1，Note 4
Low Temperature Storage	Ta = -20℃ 120hrs	Note 1，Note 4
High Temperature Operation	Ts = 50℃ 120hrs	Note 2，Note 4
Low Temperature Operation	Ta = 0℃ 120hrs	Note 1，Note 4
Operate at High Temperature and Humidity	+40℃, 90%RH 120hrs	Note 4
Thermal Shock	-20℃/30 min ~ +60℃/30 min for a total 100 cycles, Start with cold temperature and end with high temperature.	Note 4
Vibration Test	Frequency range:10~55Hz Stroke:1.5mm Sweep:10Hz~55Hz~10Hz 2 hours for each direction of X. Y. Z. (6 hours for total)	
Mechanical Shock	100G 6ms,±X, ±Y, ±Z 3 times for each direction	
Package Vibration Test	Random Vibration : ISTA-3A 1Hz~200Hz,Grms=0.53 Half hours for direction of Z.	
Package Drop Test	Height:60 cm 1 corner, 3 edges, 6 surfaces	
Electro Static Discharge	± 2KV, Human Body Mode, 100pF/1500Ω	

Note 1: Ta is the ambient temperature of samples.
Note 2: Ts is the temperature of panel's surface.
Note 3: In the standard condition, there shall be no practical problem that may affect the display function. After the reliability test, the product only guarantees operation, but don't guarantee all of the cosmetic specification.
Note 4: Before cosmetic and function test, the product must have enough recovery time, at least 2 hours at room temperature.

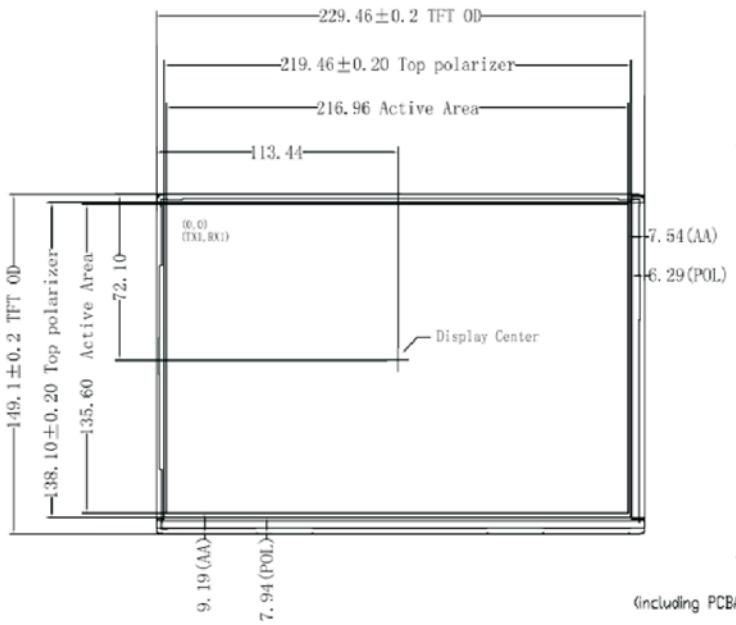

TOP VIEW

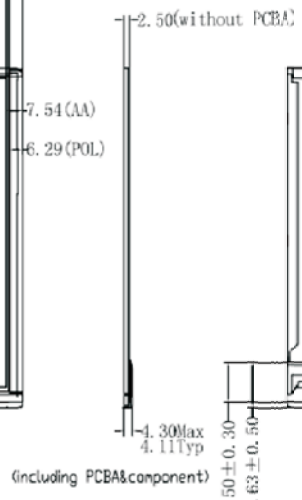

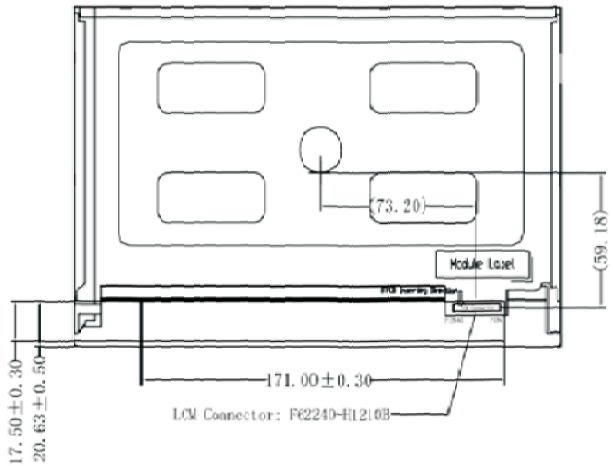

BOTTOM VIEW

TFT PIN TABLE

PIN NO	SIGNAL
1	VCOM
2	VDD
3	VDD
4	NC
5	NC
6	NC
7	GND
8	Rxin0-
9	Rxin0+
10	GND
11	Rxin1-
12	Rxin1+
13	GND
14	Rxin2-
15	Rxin2+
16	GND
17	RxCLK-
18	RxCLK+
19	GND
20	Rxin3-
21	Rxin3+
22	GND
23	NC
24	NC
25	GND
26	NC
27	LED_PWM
28	NC
29	AVDD
30	GND
31	LED-
32	LED-
33	NC
34	NC
35	VGL
36	NC
37	CABC_EN
38	VGH
39	LED+
40	LED+

Note:

1.General Tolerance ±0.30mm;

2.The LCM Connector is F62240-H1210B

1	Operating Voltage:	VDD=3.3V
2	Resolution:	1280*800RGB
3	Color:	16.7M
4	Interface:	LVDS
5	Display type:	Transmissive
6	Viewing Direction:	ALL
7	Operating Temp:	0°C~50°C
8	Storage Temp:	-20°C~60°C
9	Driver IC:	
10	Backlight:	

SHEET 17 OF 17

DATE: 10/30/15

HDA1010W-S-WV

REV.: 3.0

Q.A.: Z.W.

HANTRONIX, INC.
10080 BUBB RD.
CUPERTINO, CA 95014