HANTRONIX

PRODUCT SPECIFICATION

HDA570V-G

5.7”, TFT VGA COLOR
LCD DISPLAY MODULE

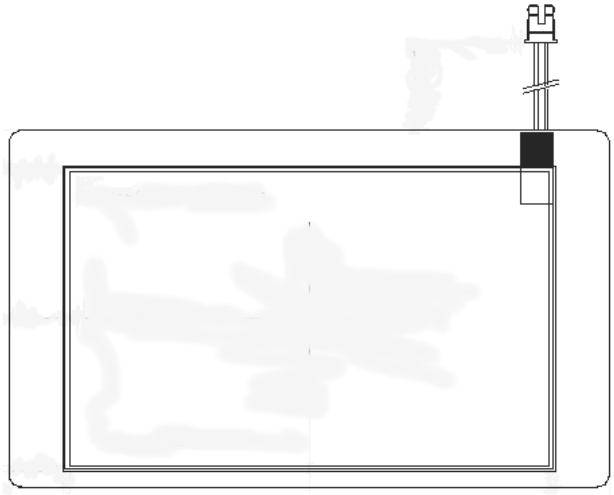

HANTRONIX, INC. 10080 BUBB RD. CUPERTINO, CA 95014	Q.A.: Z.W.	REV.: 1.1	HDA570V-G	SHEET 1 OF 22 DATE: 10/31/13

1. General Description and Features

HDA570V-G is a transmissive type color active matrix TFT (Thin Film Transistor) liquid crystal display (LCD) that uses amorphous silicon TFT as a switching device. This model is composed of a TFT-LCD module, a driver circuit and a back-light unit. Graphics and texts can be displayed on a VGA 640 (W) x 3 x 480 (H) dots with 262,144 colors by supplying 18 bits data signal (6bits/each color).

1.1 Features

- Transmissive and back-light with 21th LEDs are available.
- TN (Twisted Nematic) mode.
- Digital RGB (6bits/color) data transfer.
- Clock signal: latching data at the falling edge.
- RoHS Compliance

1.2 LCD Module

Item	Specification	Unit
Screen Size	5.7 inches	Diagonal
Display Resolution	640 (H) x 480 (V)	Pixel
Active Area	115.20 (H) x 86.40 (V)	mm
Display Mode	Normally white mode/ Transmissive/ Wide view	--
Pixel Arrangement	R,G,B Vertical Tripe	--
Pixel size	181.5 x 181.5	um
Display Color	262K Colors	--
Viewing Direction	6 o'clock(Gray inversion)	--
Input Interface	Digital RGB (6bits/color) Data Transfer	--

2. Mechanical Information

Item		Min.	Typ.	Max.	Unit	Note
Module Size	Horizontal (H)	--	144.00	--	mm	(1,2,3)
	Vertical (V)	--	104.60	--	mm	(2)
	Thickness (T)	--	13.0	--	mm	(1,3)
Weight		--	(196)	--	g	--

Note (1) Not include FPC. Refer to the Outline Dimension Drawing as attached.
(2) Back-light unit is included.
(3) Excluding backlight cables.

3. Electrical Specifications

3.1 Absolute Max. Ratings

3.1.1 Absolute Ratings of Environment

If the operating condition exceeds the following absolute maximum ratings, the TFT LCD module may be damaged permanently.

($Ta=25\pm2°C$, $V_{SS}=GND=0$)

Item	Symbol	Min.	Max.	Unit	Note
Storage temperature	T_{STG}	-30	80	°C	(1)
Operating temperature	T_{OPR}	-20	70	°C	(1,2,3)

Note (1) 95 % RH Max. (40 °C ≥ Ta). Maximum wet-bulb temperature at 39 °C or less. (Ta > 40 °C) No condensation.

Note (2) In case of below 0°, the response time of liquid crystal (LC) becomes slower and the color of panel becomes darker than normal one. Level of retardation depends on temperature, because of LC's character

Note (3) Only operation is guarantied at operating temperature. Contrast, response time, another display quality are evaluated at +25°C.

3.1.2 Electrical Absolute Maximum Ratings

(V_{SS}=GND=0)

Parameter	Symbol	Min.	Max.	Unit	Remark
Power supply voltage	V_{CC}	-0.3	5.0	V	
Signal input voltage	R0-R5,G0-G5, B0-B5,DCLK,DE	-0.3	Vcc+0.3	V	--
Permissive input ripple voltage	V_{RF}	--	100	mVp-p	V_{CC} = +3.3V

Display On/Off Sequence :

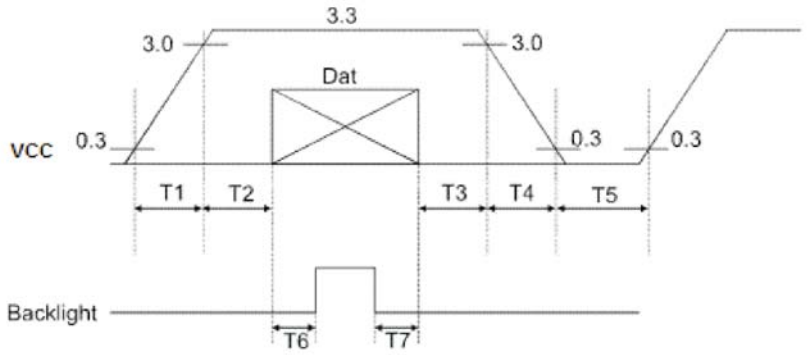

Data: DCLK, R0 ~ R5, G0 ~ G5, B0 ~ B5, DE

T1≤10ms, 50ms≤T2, 0<T3≤50ms, 0<T4≤10ms, 1s≤T5, 200ms≤T6, 200ms≤T7

3.2 Electrical Characteristics

3.2.1 DC Electrical Characteristics of the TFT LCD

(Ta=25±2°C, V_{SS}=GND=0)

Item		Symbol	Min.	Typ.	Max.	Unit	Remark
Power supply		VCC	3.0	3.3	3.6	V	Note 1
Input Voltage for logic	H Level	VIH	0.7VCC	-	VCC	V	
	L Level	VIL	0	-	0.3VCC	V	
Power Supply current		ICC		(120)	(160)	mA	Note 2

Note1: Vcc-dip conditions

Vcc-dip conditions should also follow the Vcc-turn-on conditions

Td ≤ 10ms

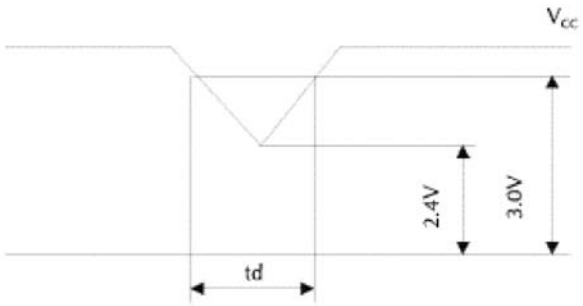

Note2: fv =60Hz , Ta=25°C , Display pattern : Black pattern

3.3 AC Timing Characteristic of The LCD

3.3.1 Timing Condition

Parameter	Symbol	Min.	Typ.	Max.	Unit.	Remark
CLK frequency	F_{CPH}	22.66	25.175	27.69	MHZ	
CLK period	T_{CPH}	36.11	39.7	44.13	ns	
CLK pulse duty	T_{CWH}	40	50	60	%	
HS period	T_H	750	800	850	T_{CPH}	
HS pulse width	T_{WH}	5	30	--	T_{CPH}	
HS-first horizontal data time	T_{HS}	112	144	175	T_{CPH}	
Display period	T_{HA}	--	640	--	T_{CPH}	
HS setup time	T_{HST}	10	--	--	ns	
HS hold time	T_{HHD}	10	--	--	ns	
VS pulse width	T_{WV}	1	3	5	T_H	
First line data input time	T_{STV}	--	35	--	T_H	
VS period	T_V	515	525	535	T_H	
VS setup time	T_{VST}	10	--	--	ns	
VS hold time	T_{VHD}	10	--	--	ns	

Note : When SYNC mode is used, 1st data start from 144th CLK after HS falling (when STHD[5:0]=00000)

Parameter	Symbol	Min.	Typ.	Max.	Unit.	Remark
DEN Period	T_{DEN}	--	800	--	T_{CPH}	
DEN pulse width	T_{EP}	--	640	--	T_{CPH}	
DEN frame active time	T_{DEA}	--	480	--	T_{DEN}	
DEN frame blanking time	T_{DEB}	--	45	--	T_{DEN}	
DEN setup time	T_{ESU}	10	--	--	ns	

3.3.2 Clock and Data Waveform

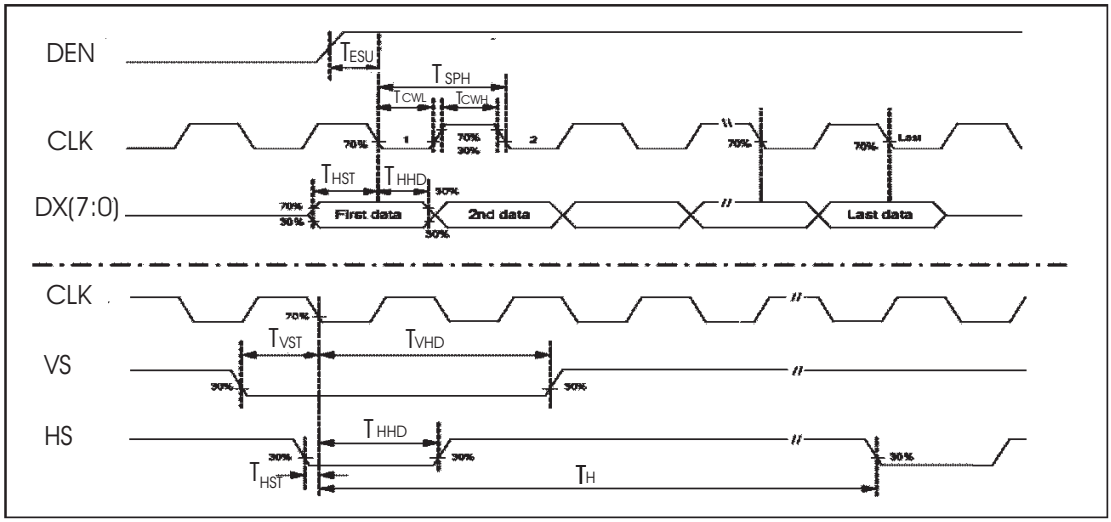

3.3.3 Parallel RGB SYNC Mode Horizontal Data Format

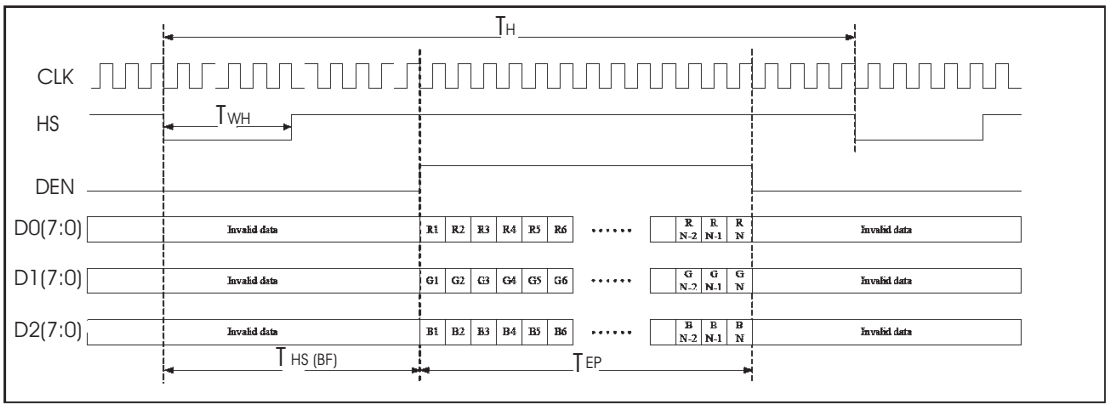

3.3.4 Parallel RGB DEN Mode Horizontal Data Format.

HANTRONIX, INC. 10080 BUBB RD. CUPERTINO, CA 95014	Q.A.: Z.W.	REV.: 1.1	HDA570V-G	SHEET 7 OF 22 DATE: 10/31/13

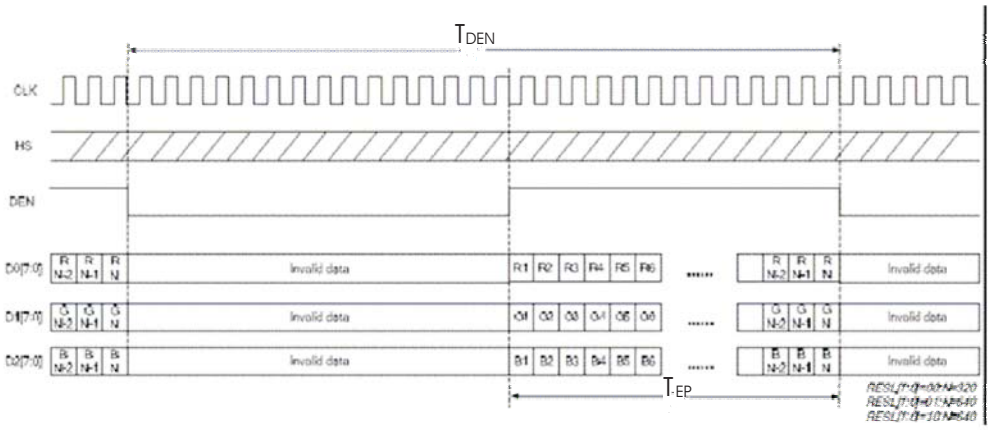

3.4 Back-Light Unit

The Back-light system is an edge-lighting type with 21 white LED(Light Emitting Diode)s. The characteristics of 21 white LEDs are shown in the following tables.

(Ta= Room Temp)

Characteristics		Symbol	Min.	Typ.	Max.	Unit	Note
Current of Back-light Unit		I_B	-	140	175	mA	(1)
Voltage of Back-light Unit		V_B	-	(9.6)	(10.5)	V	
Power Consumption		P_{BL}	-	(1344)	(1837.5)	mW	(2)
LED Life Time	25°C	-	(40000)	-	-	hr	(3)

Note (1) LEDS in 3 series x 7 parallel type.

(2) Where I_B = 140mA, V_B = 9.6, $P_{BL} = V_B \times I_B$

(3) The environmental conducted under ambient air flow ,at Ta=25±2°C,60%RH±5%

4. Optical Characteristics

4.1 Optical characteristic of the LCD

The following items are measured under stable conditions. The optical characteristics should be measured in a dark room or equivalent state.

Measuring equipment: BM-5A, BM-7

Item		Symbol	Condition	Min	Type	Max	Unit	Note
Brightness				(360)	(450)	--	cd/m^2	
Response time		T_r	$\theta=0°$	-	15	20	ms	.
		T_f		--	25	35	ms	
Contrast ratio		CR	At optimized viewing angle	(300)	(450)	--	--	
Color Gamut		NTSC %	--	--	50	--	%	
Color Chromaticity (CIE 1931)	Red	R_x	$\theta=0°$ Normal Viewing Angle	0.585	0.615	0645	--	
		R_y		0.314	0.344	0.374		
	Green	G_x		0.277	0.307	0.337	--	
		G_y		0.532	0.562	0.592		
	Blue	B_x		0.103	0.133	0.163	--	
		B_y		0.120	0.150	0.180		
	White	Wx		0.279	0.309	0.339	--	
		Wy		0.320	0.350	0.380		
Viewing Angle (6H)	Hor.	θ_R	CR≥10	55	65	--	Degree	
		θ_L		55	65	--		
	Ver.	ϕ_H		40	50	--		
		ϕ_L		55	65	--		

a. Test equipment setup

After stabilizing and leaving the panel alone shall be warmed up for the stable operation of LCM, the measurement should be executed. Measurement should be executed in a stable, windless, and dark room. Optical specifications are measured by Topcon BM-7(fast) with a viewing angle of 2° at a distance of 50cm and normal direction.

b. Definition of response time: Tr and Tf

The response time is defined as the following figure and shall be measured by switching the input signal for "black" and "white".

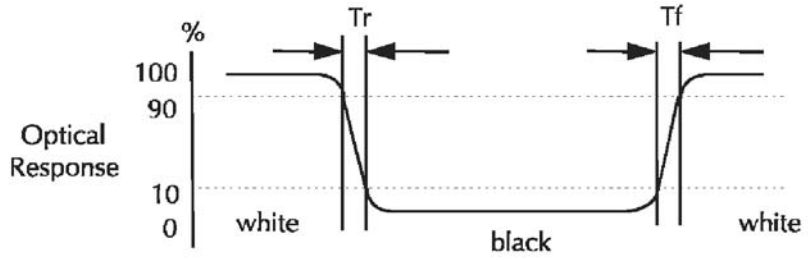

c. Definition of contrast ratio:

$$\text{Contrast Ratio (CR)} = \frac{\text{Brightness measured when LCD is at "white state"}}{\text{Brightness measured when LCD is at "black state"}}$$

d. Measured at the center area of the panel when all the input terminals of LCD panel are electrically opened.

e. View Angle

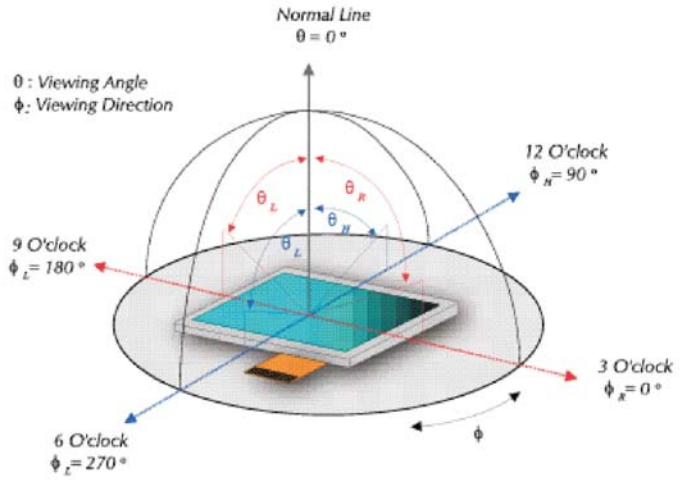

f. Definition of Luminance of White: Luminance of white at the center points

Light Source of Back-Light Unit	LED Type

g. Definition of White Uniformity

$$\text{White Uniformity} = \frac{\text{Min. luminance of white among 9-points}}{\text{Max. luminance of white among 9-points}}$$

h. The definition of Color Gamut -Color Chromaticity CIE 1931

Color coordinate of white & red, green, blue at center point.

Color Gamut : NTSC(%) = (RGB Triangle Area / NTSC Triangle Area) x 100

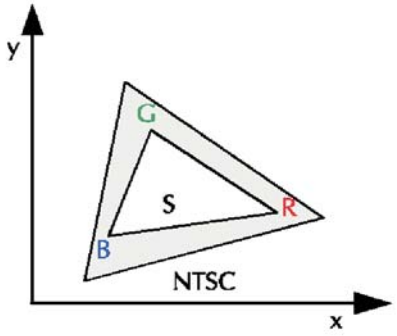

HANTRONIX, INC. 10080 BUBB RD. CUPERTINO, CA 95014	Q.A.: Z.W.	REV.: 1.1	HDA570V-G	SHEET 12 OF 22 DATE: 10/31/13

5. I/O Terminal

5.1 Pin Assignment

Pin No.	Symbol	I/O	Function	Remark
1	VSS	P	GND	
2	DCLK	I	Clock signal for sampling each data signal	
3	IHS	I	Horizontal synchronous signal (Negative)	
4	IVS	I	Vertical synchronous signal (Negative)	
5	VSS	P	GND	
6	R0	I	RED data signal (LSB)	
7	R1	I	RED data signal	
8	R2	I	RED data signal	
9	R3	I	RED data signal	
10	R4	I	RED data signal	
11	R5	I	RED data signal (MSB)	
12	VSS	P	GND	
13	G0	I	GREEN data signal (LSB)	
14	G1	I	GREEN data signal	
15	G2	I	GREEN data signal	
16	G3	I	GREEN data signal	
17	G4	I	GREEN data signal	
18	G5	I	GREEN data signal (MSB)	
19	VSS	P	GND	
20	B0	I	BLUE data signal(LSB)	
21	B1	I	BLUE data signal	
22	B2	I	BLUE data signal	
23	B3	I	BLUE data signal	
24	B4	I	BLUE data signal	
25	B5	I	BLUE data signal(MSB)	
26	VSS	P	GND	
27	DEN	I	Signal to settle the horizontal display position (Positive)	
28	VCC	P	3.3V power supply	
29	VCC	P	3.3V power supply	
30	REV	I	Select horizontal and vertical scanning direction.	Note5-1
31	VSS	P	GND	
32	NC	--	No Connection	
33	VSS	P	GND	

Note 5 - 1

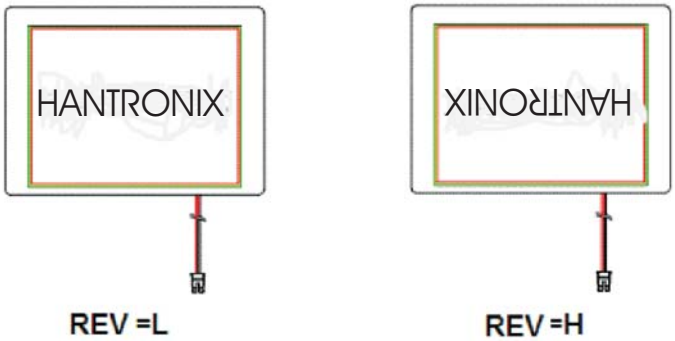

5.2 Back-light Unit (BLU)

Pin No.	Symbol	Function	Remark
1	LEDA	Power Supply for LED backlight	Red
2	LEDK	GND for LED backlight	Black

Connector: JST BHSR-02VS-1

5.3 Block Diagram

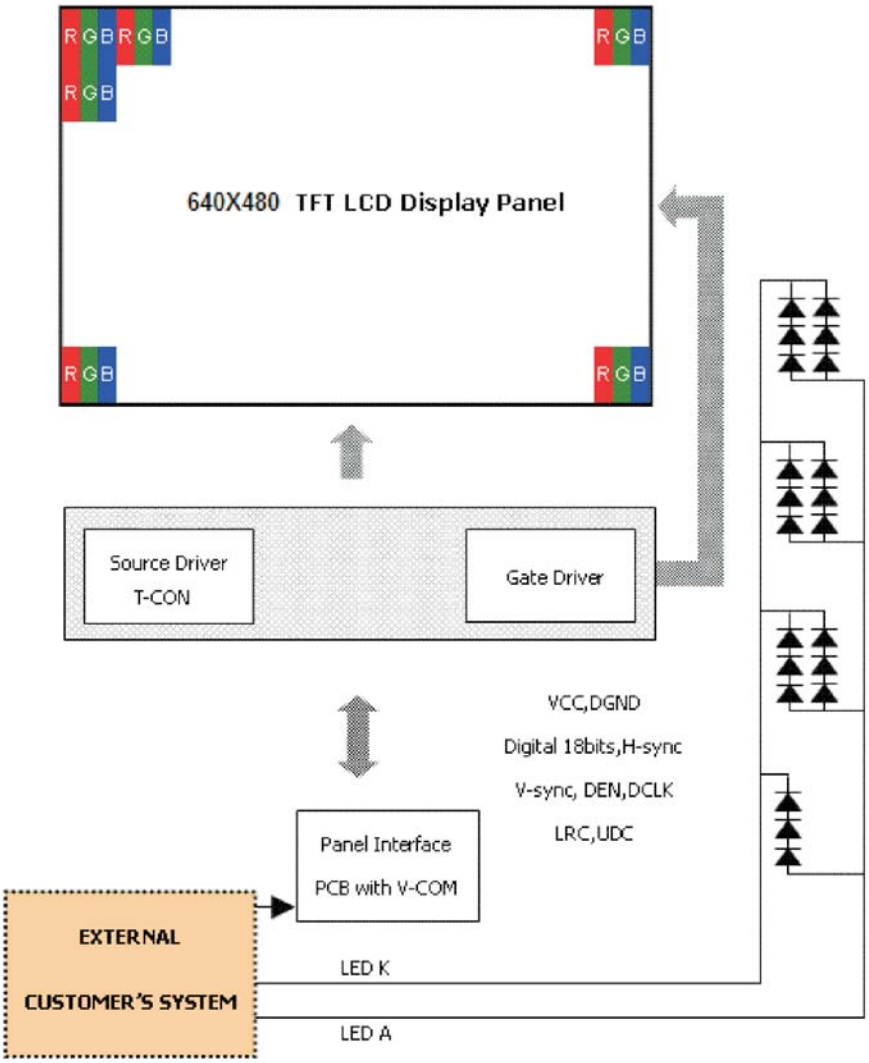

HANTRONIX, INC. 10080 BUBB RD. CUPERTINO, CA 95014	Q.A.: Z.W.	REV.: 1.1	HDA570V-G	SHEET 15 OF 22 DATE: 10/31/13

5.4 Basic Display Color and Gray Scale

	Color & Gray Scale	Data Signal																	
		R5	R4	R3	R2	R1	R0	G5	G4	G3	G2	G1	G0	B5	B4	B3	B2	B1	B0
Basic Color	Black	0	0	0	0	0	0	0	0	0	0	0	0	0	0	0	0	0	0
	Red(0)	1	1	1	1	1	1	0	0	0	0	0	0	0	0	0	0	0	0
	Green(0)	0	0	0	0	0	0	1	1	1	1	1	1	0	0	0	0	0	0
	Blue(0)	0	0	0	0	0	0	0	0	0	0	0	0	1	1	1	1	1	1
	Cyan	0	0	0	0	0	0	1	1	1	1	1	1	1	1	1	1	1	1
	Magenta	1	1	1	1	1	1	0	0	0	0	0	0	1	1	1	1	1	1
	Yellow	1	1	1	1	1	1	1	1	1	1	1	1	0	0	0	0	0	0
	White	1	1	1	1	1	1	1	1	1	1	1	1	1	1	1	1	1	1
Red	Black	0	0	0	0	0	0	0	0	0	0	0	0	0	0	0	0	0	0
	Red(1)	0	0	0	0	0	1	0	0	0	0	0	0	0	0	0	0	0	0
	Red(2)	0	0	0	0	1	0	0	0	0	0	0	0	0	0	0	0	0	0
	:	:	:	:	:	:	:	:	:	:	:	:	:	:	:	:	:	:	:
	Red(31)	0	1	1	1	1	1	0	0	0	0	0	0	0	0	0	0	0	0
	:	:	:	:	:	:	:	:	:	:	:	:	:	:	:	:	:	:	:
	Red(62)	1	1	1	1	1	0	0	0	0	0	0	0	0	0	0	0	0	0
	Red(63)	1	1	1	1	1	1	0	0	0	0	0	0	0	0	0	0	0	0
Green	Black	0	0	0	0	0	0	0	0	0	0	0	0	0	0	0	0	0	0
	Green(1)	0	0	0	0	0	0	0	0	0	0	0	1	0	0	0	0	0	0
	Green(2)	0	0	0	0	0	0	0	0	0	0	1	0	0	0	0	0	0	0
	:	:	:	:	:	:	:	:	:	:	:	:	:	:	:	:	:	:	:
	Green(31)	0	0	0	0	0	0	0	1	1	1	1	1	0	0	0	0	0	0
	:	:	:	:	:	:	:	:	:	:	:	:	:	:	:	:	:	:	:
	Green(62)	0	0	0	0	0	0	1	1	1	1	1	0	0	0	0	0	0	0
	Green(63)	0	0	0	0	0	0	1	1	1	1	1	1	0	0	0	0	0	0
Blue	Black	0	0	0	0	0	0	0	0	0	0	0	0	0	0	0	0	0	0
	Blue(1)	0	0	0	0	0	0	0	0	0	0	0	0	0	0	0	0	0	1
	Blue(2)	0	0	0	0	0	0	0	0	0	0	0	0	0	0	0	0	1	0
	:	:	:	:	:	:	:	:	:	:	:	:	:	:	:	:	:	:	:
	Blue(31)	0	0	0	0	0	0	0	0	0	0	0	0	0	1	1	1	1	1
	:	:	:	:	:	:	:	:	:	:	:	:	:	:	:	:	:	:	:
	Blue(62)	0	0	0	0	0	0	0	0	0	0	0	0	1	1	1	1	1	0
	Blue(63)	0	0	0	0	0	0	0	0	0	0	0	0	1	1	1	1	1	1

0 : Low level voltage, 1 :High level voltage

Each basic color can be displayed in 64 gray scales from 6 bit data signals. With the combination of total 18 bit data signals, the 262,144-color display can be achieved on the screen.

6. Reliability Condition

No change on display and in operation under the following test condition.

Condition: Unless otherwise specified, tests will be conducted under the following condition.

Temperature: 20±5°C. Humidity: 65±5%RH.

Tests will be not conducted under functioning state.

No.	Parameter	Condition	Notes
1	High Temperature Operating	70°C±2°C, 240hrs (Operation state).	-
2	Low Temperature Operating	-20°C±2°C, 240hrs (Operation state).	-
3	High Temperature Storage	80°C±2°C, 240hrs.	-
4	Low Temperature Storage	-30°C±2°C, 240hrs.	-
5	High Temperature and High Humidity Operation Test	60°C±2°C, 90%, 240hrs.	-
6	Vibration Test	Total fixed amplitude: 1.5mm. Vibration Frequency: 10~55Hz. One cycle 60 seconds to 3 direction of X, Y, Z each 15 minutes.	-
7.	Drop Test	To be measured after dropping from 60cm high on the concrete surface in packing state. 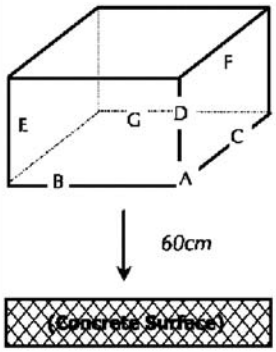 *Dropping method corner dropping:* *A corner: Once edge dropping.* *B, C, D edge: Once face dropping.* *E, F, G face: Once.*	-

Notes:
1. No dew condensation to be observed.
2. The function test shall be conducted after 4 hours storage at the normal temperature and humidity after removed from the test chamber.
3. Vibration test will be conducted to the product itself without putting I in a container.

8. Incoming Inspection Standards

8.1 Inspection and Environment Conditions

8.1.1 Inspection Conditions:

(1)Inspection Distance: 35 cm±5cm

(2)View Angle : Light-on Inspection Angle ±5°

Cosmetic Inspection Angle ±45°

8.1.2 Environment Conditions:

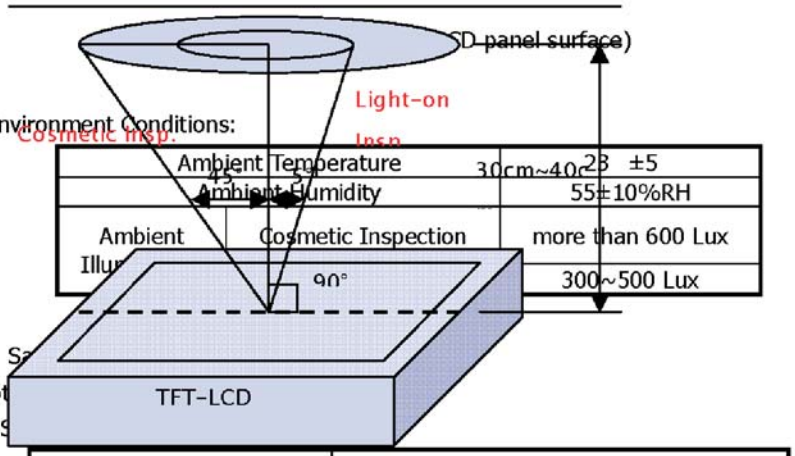

8.1.3 Sa

(1) Lot

(2) S

Sampling Plan		MIL-STD-105E Normal Inspection, Single Sampling Level II
AQL	Major Defect	1.0%
	Minor Defect	1.5%

(3) The classification of Major(MA) and Minor(MI) defects is shown as 3. Inspection Criteria.

8.1.4 Inspection Criteria

8.1.4.1 Cosmetic Inspection(Panel):

Item	Judgment Criteria	Classification
Chipping on Panel	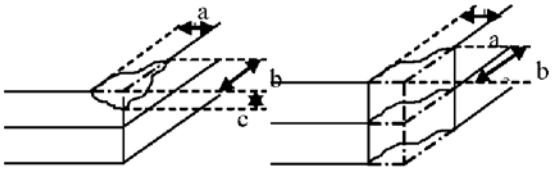 a 3.0mm□b 3.0mm□c t (Bottom glass thickness)	MA
Scratch on Panel *Note-2	W 0.05mm or L< 5mm: Ignored 0.05mm<W 0.1mm and L 5mm: N 5 W>0.1mm or L>5mm: Not allowed	MI
Bubble or Dent on Panel *Note-3	D□0.2mm: Ignored 0.2mm<D□0.3mm: N□5 D>0.3mm: Not allowed	MI
Panel Crack	 Not Allowed crack	MA
Bezel Deformation	Obvious deformation is not allowed.	MI
Bezel Oxidation	Not allowed if it rusts continuously over 1 cm (It is out of warranty with rusted tin plate)	MI
Bezel Scratch	L□20mm , W□0.2 , N□3	MI
Metal Squash Dent /Flange(Front Side)	D(W)□1,L□3,N□3;	MI
B/L High Voltage Wire Denudation	Not allowed	MA
Polarizer flaw or leak out resin	Defect is defined as the active area.	MI
Outline Dimension	Must in Spec, refer to related product spec.	MI

8.1.4.2 Functional Inspection:

Item	Judgment Criteria				Classification
	Area(Note1)		I	O	
Point Defect	Bright dot	Random	2		MI
		2 dots adjacent	0	0	
		3 dots adjacent or more	0	0	
	Dark dot	Random	3		
		2 dots adjacent	0		
		3 dots adjacent or more	0	0	
	Total Dot Defect		5		
	Distance	Distance between Bright and Bright dot	L□5mm		
		Distance between Bright and Dark dot	L□5mm		
		Distance between Dark dot	L□5mm		
	(1) It is defined as Point Defect if defect area□0.5dot (2) It is ignored if defect area□0.5dot (3)Weak point defect will be defined as Bright Dot if it can be observed through ND filter 5%(Full Screen Black Inspection)				
Line Defect	Obvious vertical or horizontal line defect is not allowed.				MA
Mura	Not allowed if it can be observed through ND Filter 5 %				MI
Foreign Material in spot shape *Note-3	D□0.2mm: Ignored 0.2mm<D□0.5mm: N□8 D>0.5mm: Not allowed				MI
Foreign Material in line or spiral shape *Note-4	W□0.05mm or L□5mm: Ignored 0.05mm<W□0.2mm and L1.0mm□5mm: N□8 W>0.2mm or L>5mm: Not allowed				MI
Display Function Abnormal	No Malfunction can be allowed				MA

Note-1 I/O Area Definition

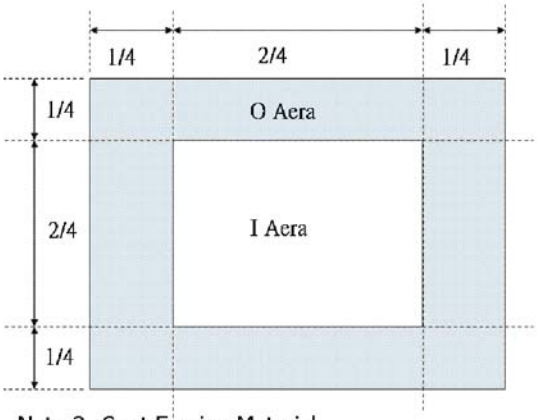

Note-2 Polarizer Scratch

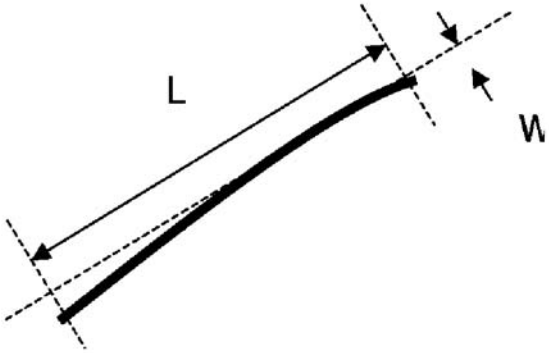

Note-3 Spot Foreign Material
(W □L / 4)

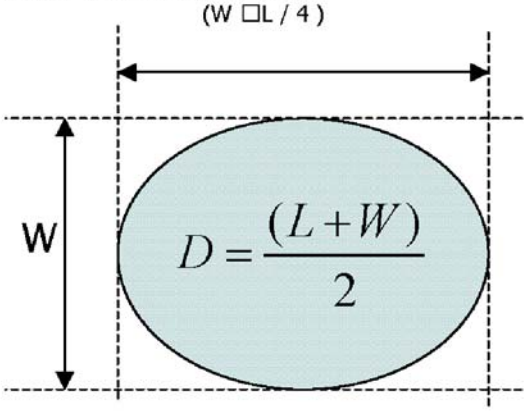

Note-4 Line or Spiral Foreign Material
(W<L / 4)

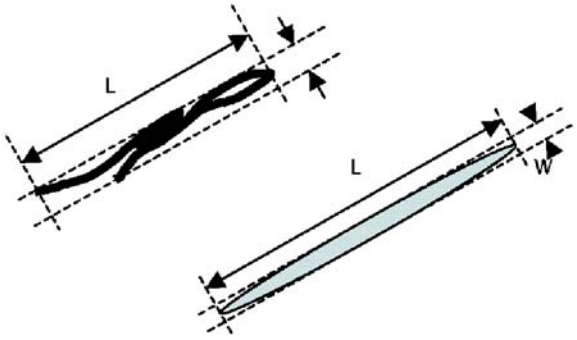

HANTRONIX, INC. 10080 BUBB RD. CUPERTINO, CA 95014	Q.A.: Z.W.	REV.: 1.1	HDA570V-G	SHEET 21 OF 22 DATE: 10/31/13

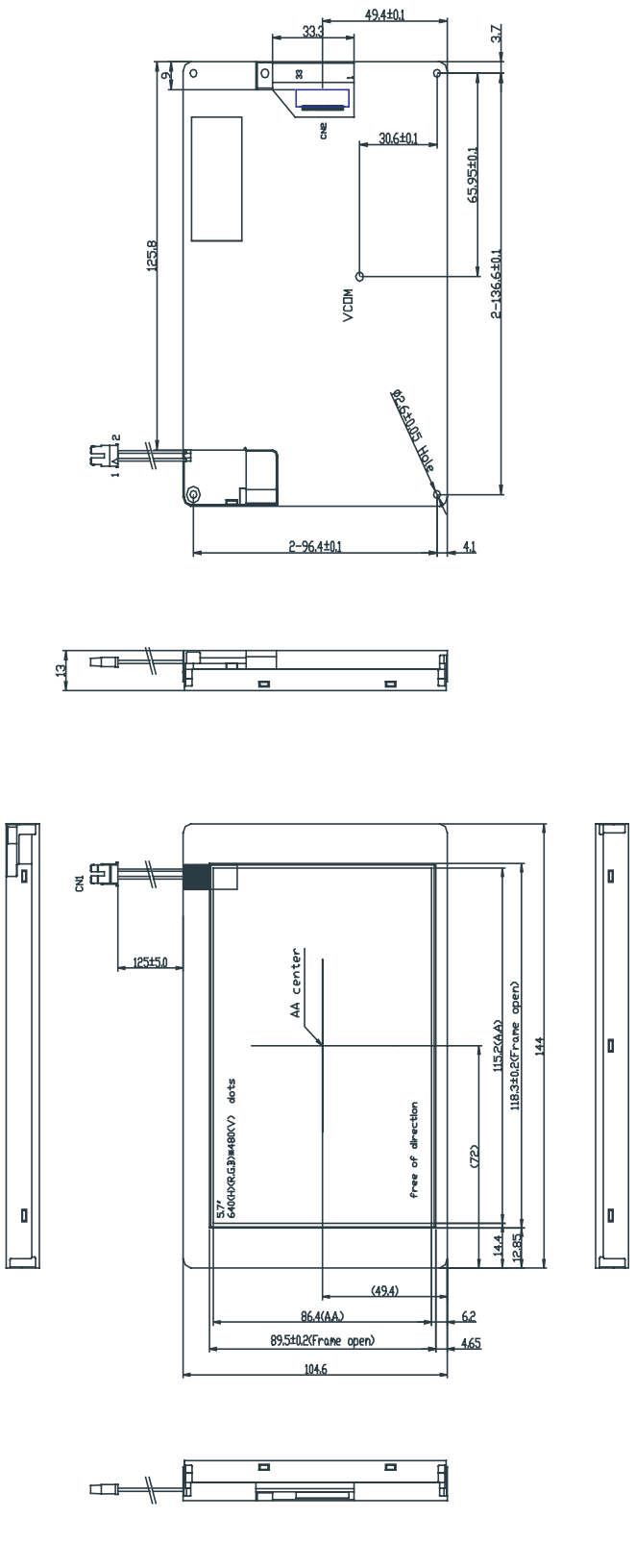

CN1:BHSR-02VS-1(JST)
CN2:F0502WR-S-33PD01 or equivalent
(Bottom Contact)

PIN ASSIGNMENT:

1.VSS	11.R5	21.B1	31.VSS
2.CLK	12.VSS	22.B2	32.NC
3.IHS	13.G0	23.B3	33.VSS
4.IVS	14.G1	24.B4	
5.VSS	15.G2	25.B5	
6.R0	16.G3	26.VSS	
7.R1	17.G4	27.DEN	
8.R2	18.G5	28.VCC	
9.R3	19.VSS	29.VCC	
10.R4	20.B0	30.REV	

HANTRONIX, INC. 10080 BUBB RD. CUPERTINO, CA 95014	Q.A.: Z.W.	REV.: 1.1	HDA570V-G	SHEET 22 OF 22 DATE: 10/31/13